SLICE BLADE

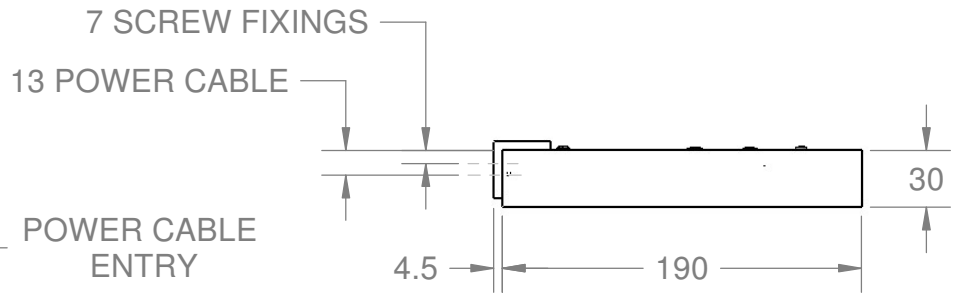

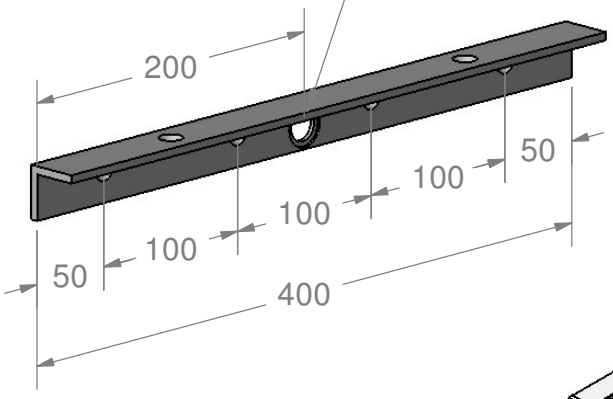

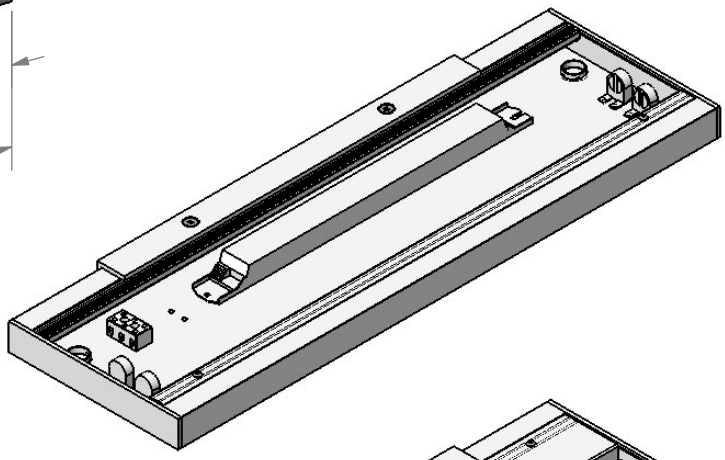

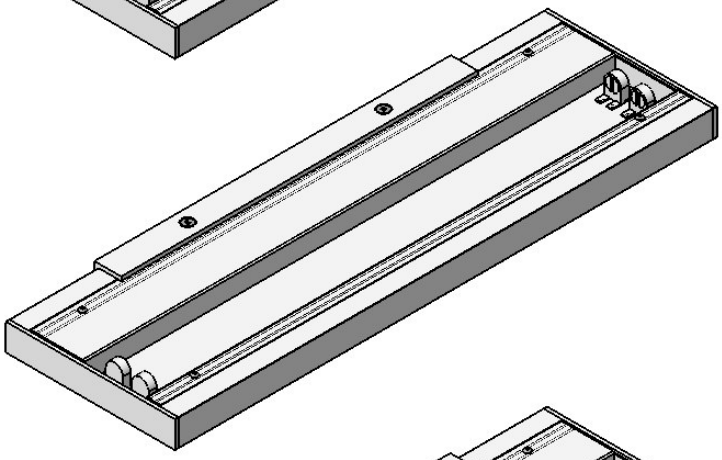

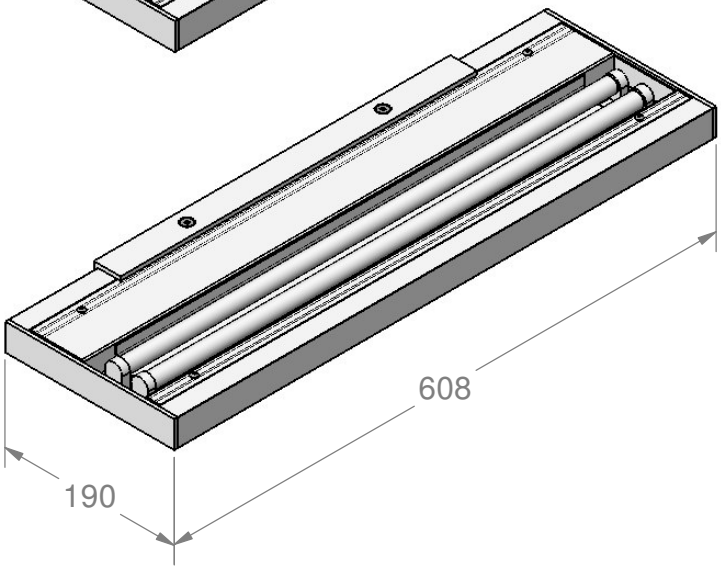

1. UNSCREW WALL MOUNT AND GEAR TRAY COVER. REMOVE MIRROR AND FLUORESCENT TUBES.
2. FIX WALL MOUNT TO WALL ENSURING SCREWS GO INTO SOLID FRAMING IN WALL. (SCREWS NOT SUPPLIED)
3. SCREW LIGHT FITTING TO WALL MOUNT CONCURRENTLY GUIDING POWER CABLE INTO FITTING. WIRE POWER CABLE INTO FTB.
4. SCREW GEAR TRAY COVER IN PLACE.
5. DROP IN MIRROR AND FIT FLUORESCENT TUBES.